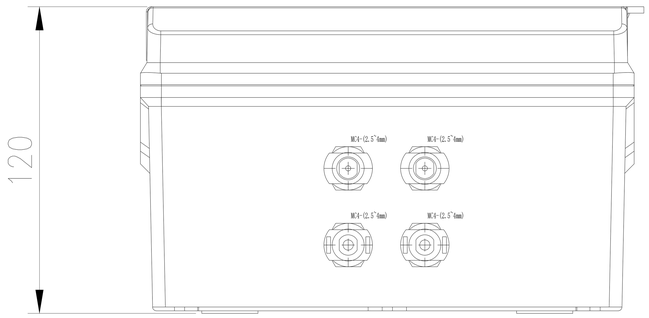

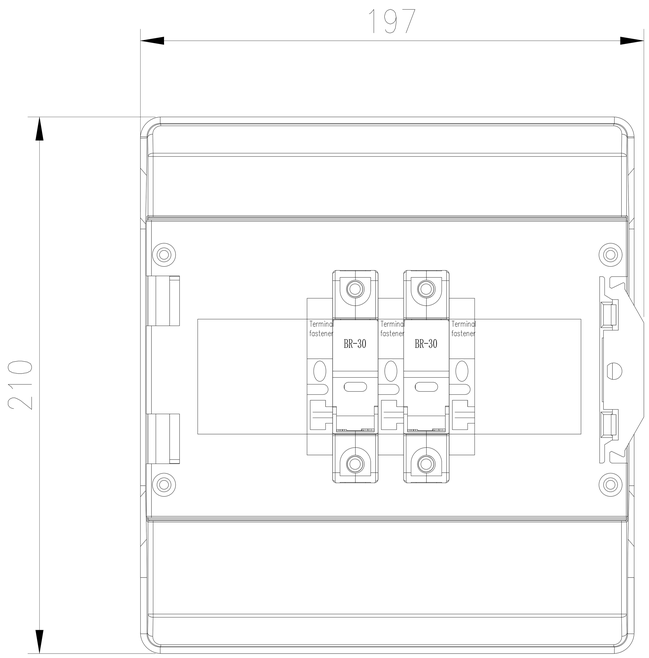

1		CABLE GLAND	MC4 SEALING RANGE 2.5-4mm	4	
number	label	The name of the	specifications	quantity	note

The contract no				Cabinet No		Factory number
					BHS-1/1 PV COMBINER BOX	
tag		Change the file no	The signature	date		Pattern marker / The proportion
design		standardized			Arrangement diagram	
drawing		Review and approval				浙江奔一新能源科技有限公司
check		approval				Zhejiang Benyi New Energy Technology Co., Ltd.
process		date				

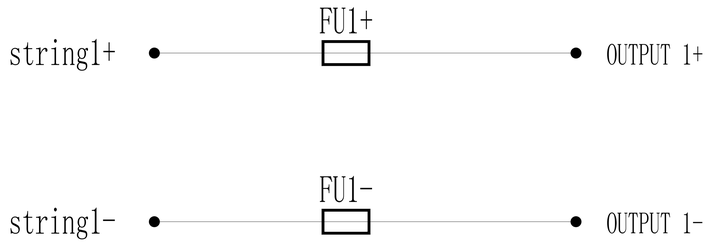

2		DC Fuse Link	A73.PV15A DC1000V	2	
1	FU	DC Fuse Holder	BR-30/1P Imax=30A DC1000V	2	
number	label	The name of the	specifications	quantity	note

The contract no				Tank no		Factory number
					BHS-1/1 DC COMBINER BOX	
tag		Change the file no	The signature	The date of		Pattern marker / The proportion
design		standardized			Schematic diagram	
drawing		Review and approval				浙江奔一新能源科技有限公司 Zhejiang Benyi New Energy Technology Co., Ltd.
check		approval				
process		The date of				